NEW

UV Optics

Key Benefits

- **Wide range of UV Polarizers/Retarders**
- **Meadowlark quality**
- **Standard and Custom Options Available**

Meadowlark Optics is pleased to offer several polarizer and retarder options that work in the ultraviolet region of the light spectrum. Collected on this page are some of our offerings, both standard and custom. If you require any ultraviolet polarization optics, please contact your Meadowlark Optics sales engineer for assistance

Polarizers

Currently, Meadowlark Optics has several standard and custom polarizers that work in the ultraviolet region. Our **Precision Linear Polarizer** (see page 6) is our most economical offering and works well for low power applications with wavelengths between 325 - 400 nm. Our **Ultra High Contrast Polarizer** (see page 9) allows the user to obtain contrast ratios in excess of 10,000,000:1 and is optimized for wavelengths between 350 - 410 nm. A custom option with higher transmission and slightly lower contraast ratio is also available. Ultraviolet **VersaLight** (see page 11) works below 300 nm, and can be used as both a reflective and transmissive polarizer. It has a wide acceptance angle and comes in a wide range of shapes and sizes. While it comes standard with no coatings, Meadowlark Optics can apply either broadband antireflection coating opposite the wire grid, over the Ultraviolet region or a V-coat for a specific wavelength. Uncoated **Glan - Thompson Polarizers** (see page 18) also work down to 320 nm and give excellent contrast ratios over a broad wavelength range. By using ultraviolet transmitting optical cement, Meadowlark Optics can go deeper into the ultraviolet region. Meadowlark Optics can manufacture all type of calcite polarizers to work in the ultraviolet region. Also, Meadowlark Optics can produce custom **Laser Line Beamsplitting Polarizers.** Manufactured out of UV Grade Fused Silica, these polarizers are made for common wavlengths in the ultraviolet region. Finally, **Alpha - Barium Borate** is another ultraviolet polarizer option that Meadowlark Opitcs is currently pursuing. Please contact your Meadowlark Optics sales engineer for assistance.

Retarders

Meadowlark Optics recently added **Compound Zero Order Quartz Retarders** to our standard product offering (see page 29). These are made out of two multiple order quartz retarders with their optic axis directions being perpendicular to each other. Specific ultraviolet wavelengths are available. Quartz retarders are excellent for applications that require consistent performance over thermal variations. We also manufacture **Multiple Order Quartz Retarders** for various wavelengths in the ultraviolet region. By using precision polishing techniques, we can provide excellent transmission, surface and transmitted wavefront quality.

For your achromatic retarder requirements, we recommend the **Bi-Crystalline Achromatic Retarder** (see page 38). These are manufactured out of crystalline quartz and magnesium fluoride. The standard ultraviolet version works to around 400 nm. Custom designs that work deeper into the ultraviolet region are available. We also manufacture **Fresnel Rhombs** that work over broad wavelength ranges, down to 250 nm. Based upon the principles of Total Internal Reflection, each reflection adds one eighth wave of retardance. Fresnel Rhombs come in quarter and half wave versions. Please contact your Meadowlark Optics sales engineer for assistance or a custom quote.

Finally, in response to you, the customer, we are investigating the manufacturing of **Liquid Crystal Devices** for use in the ultraviolet region. Please visit our website, www.meadowlark.com or contact your Meadowlark Optics sales engineer for the latest information and assistance on this or any polarization requirements you may have in the ultraviolet region.

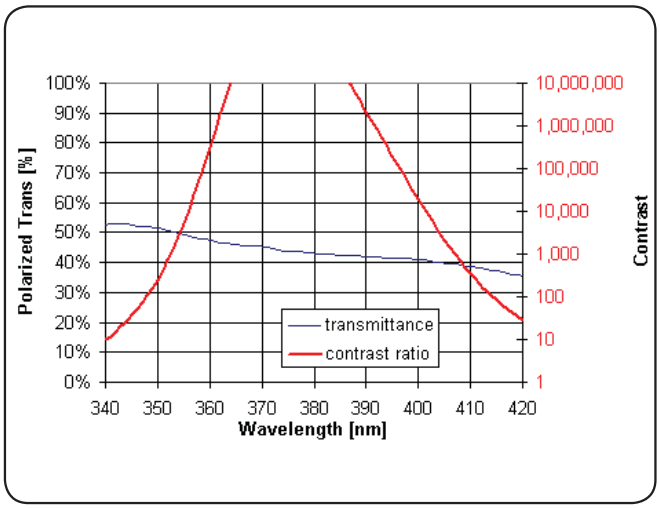

Fig. 1-23 Ultra-High Contrast UV Polarizer has excellent contrast over 350 to 410 nm

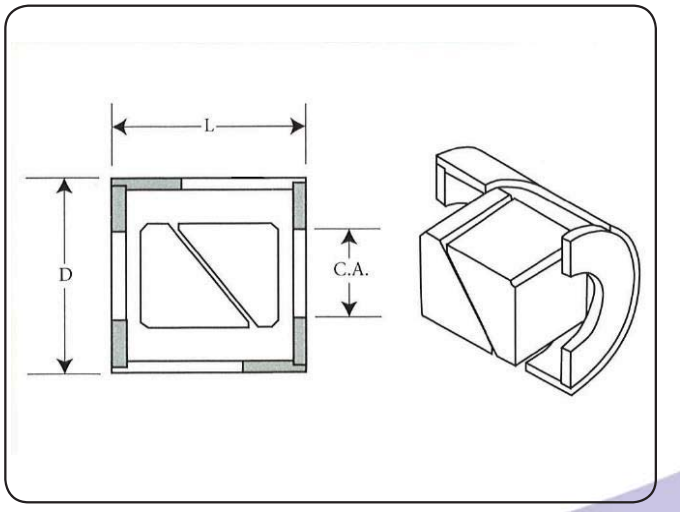

Fig. 1-24 Uncoated, air-spaced Glan-Laser Calcite Polarizers can be used from 250 to 2300 nm

NEW

Compound Zero Order Quartz Retarders

Key Benefits

- **Tolerates high temperature**
- **High CW laser damage threshold**
- **Tip tunable retardance**
- **Good UV transmission**

We provide air spaced compound zero order quartz retarders for special applications where higher damage threshold, or better UV transmission than normal is required. These retarders combine two multiple order quartz retarders with their optic axis directions perpendicular to one another.The net retardance of the pair is the difference in the retardance of these two retarders. The net retardance is as insensitive to temperature changes as a true zero order quartz retarder but is as sensitive to angle of incidence as a multiple order quartz retarder of the thickness of the sum of the two quartz pieces. Angle tuning of retardance permits adjustment for use at a wavelength nearby the design wavelength.

SPECIFICATIONS	
Retarder Material	Crystal quartz, 2 pieces
Retardance accuracy	
Above 300 nm **Below 300 nm**	± λ/300 ± λ/200
Transmitted Wavefront Distortion (at 632.8 nm over central 8mm diameter)	≤ λ/10
Reflectance (per surface)	≤ 0.25% at normal incidence
Surface Quality	20-10 scratch and dig
Beam Deviation	≤ 10 arc sec
Diameter Tolerance	± 0.005 in.
Standard Wavelengths	266, 308, 355, 488, 514.5, 532 and 1064 nm
Temperature Range	-20° C to +80° C
Recommended Safe Operating Limit	1 MW/cm^2 CW at 1064 nm 2 J/cm^2 for a 10 nsec pulse at 1064 nm

ORDERING INFORMATION

Unmounted				
Diameter (in.)	*Clear Aperture (in.)*	*Thickness (in.)*	*λ/4 Wave Part No.*	*λ/2 Wave Part No.*
1.00	0.80	0.23	ZQ-100-λ	ZH-100-λ

Please include the standard wavelength λ in nanometers when ordering. Custom sizes or center wavelengths can be specified for your application.

Custom sizes are available. Please contact your Meadowlark Optics sales engineer for assistance

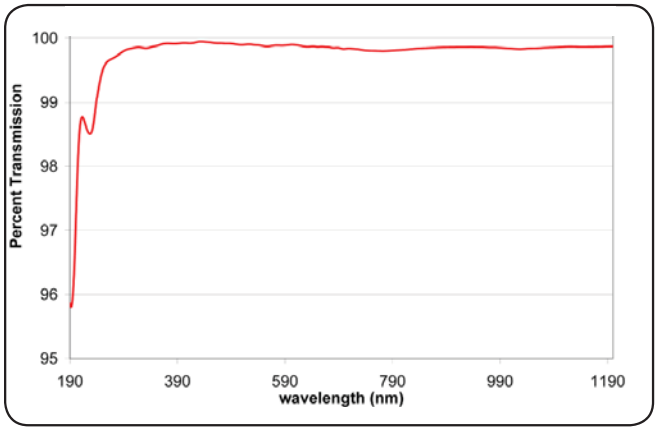

Fig. 2-7 Zero Order Quartz Retarder waveplate internal transmission

NEW

Dual Wavelength Retarders

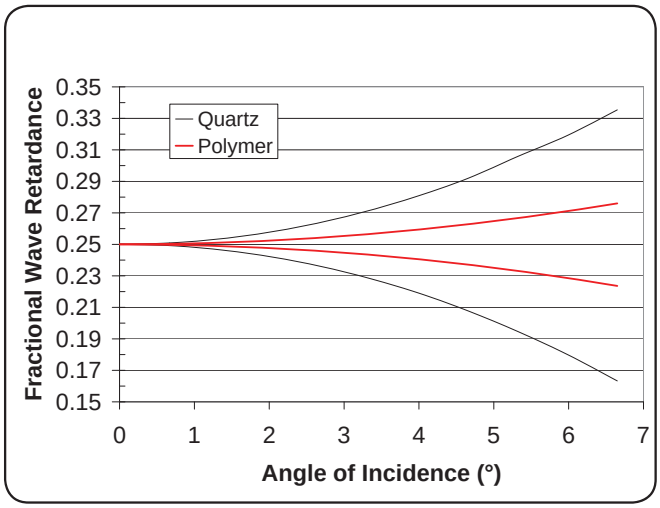

Fig. 2-12 Dual Wavelength Field of View

Dual wavelength retarders can provide the same retardance at two wavelengths that are separated in wavelength by more than the span covered by an achromatic retarder. They can also provide different specified retardances at two different wavelengths. Traditionally these retarders have been made using crystal quartz and are multiorder retarders at both wavelengths. Our dual wavelength retarders use polymers instead. They are usually much lower order and consequently have a slower change in retardance with angle of incidence as shown in the figure. On average the order is about 20% of that for a comparable quartz dual wavelength retarder. Call for a quote on a custom coating on these normally uncoated retarders. The retardance tolerance is ±0.01waves at both wavelengths. Many custom combinations not listed in the catalog are available. Please call for a quote on your custom requirement. Standard unmounted sizes are 0.50 inches and 1.00 inches.

SPECIFICATIONS	
Retarder Material	Birefringent Polymer
Substrate Material	BK 7 Grade A, fine annealed
Retardance Accuracy	≤ λ/100 at both wavelengths
Transmitted Wavefront Distortion (at 632.8 nm)	≤ λ/4
Reflectance (per surface on uncoated retarders only)	~ 4% at normal incidence
Diameter tolerance	+0/-0.010 in.
Beam Deviation	≤ 1 arc min
Thickness	
Half inch diameter One inch diameter	0.14 in. 0.27 in.
Temperature Range	design dependant

Custom anti-reflection coatings to provide less than 0.5% reflection at both wavelengths are available. Please call your Meadowlark Optics sales engineer for a quote.

Key Benefits

- **Low order**
- **Wide angular field**
- **Broad wavelength coverage**

QUESTION

"I have a need for a quarter (or half) wave retarder at two different wavelengths. Which do I order, the Precision Achromatic Retarder or the Dual Wavelength Retarder?"

ANSWER

Dual wavelength retarders are primarily for use at two different wavelengths separated by 20% apart. If the wavelengths are both covered by one of our standard achromatic retarder wavelength ranges (please see the Specifications Box for Precision Achromatic Retarders on page 37), we recommend purchasing a Precision Achromatic Retarder. We can also do custom achromatic retarder wavelength ranges. Please contact your Meadowlark Optics sales engineer for assistance and a custom quote.

If the wavelength difference between the two is greater than 30 to 35 % of the lower wavelength, then we recommend a Dual Wavelength Retarder. Please contact your Meadowlark Optics sales engineer for assistance so that we can design for you the required Dual Wavelength Retarder or if you need any help at all.

QUESTION

"I need a Dual Wavelength Retarder with two non-standard retardances at two non-standard wavelengths. Can you help me?"

ANSWER:

While not all retardance and wavelength combinations are available, we can manufacture tens of thousands of different combinations for our Dual Wavelength Retarders. Please contact your Meadowlark Optics sales engineer for assistance and a custom quote.

Dual Wavelength Retarders

ORDERING INFORMATION				
Available Combinations				
First Retardance	*Second Retardance*	*Diameter (in.)*	*First Wavelength*	*Second Wavelength*
Quarter wave Half wave Full wave	Quarter wave Half wave Full wave	0.50 1.00	488 nm 514.5 nm 632.8 nm 780 nm 976 nm 1064.1 nm	488 nm 514.5 nm 632.8 nm 780 nm 976 nm 1064.1 nm

HOW TO ORDER DUAL WAVELENGTH RETARDERS

To order dual wavelength retarders, five pieces of information are required (with their symbols in brackets):

1. The First (or lower) wavelength [λ_1] in nanometers
2. The Second (or higher) wavelength [λ_2] in nanometers
3. The retardance at the first wavelength [R_1], where:
   a. Q = Quarter Wave Retardance
   b. H = Half Wave Retardance
   c. F = Full Wave Retardance
4. The retardance at the second wavelength [R_2]
   a. Q = Quarter Wave Retardance
   b. H = Half Wave Retardance
   c. F = Full Wave Retardance
5. The outside diameter, 0.50 in. or 1.00 in. [*D*] where
   a. 050 = 0.50 in.
   b. 100 = 1.00 in.

The part number is then created by these five pieces of data and the letter "D" to start it off.

$$\mathbf{D\ R_1\ R_2} - D - \lambda_1/\lambda_2$$

And we have 10,000 combinations!

Example 1:

A dual wavelength retarder is requested with a full wave of retardance at 488 nm and a half wave of retardance at 976 nm. The outside diameter is 0.50 in. The part number is then:

DFH – 050 – 0488/0976

Example 2:

A dual wavelength retarder is requested with a quarter wave of retardance at 514.5 nm and a quarter wave of retardance at 1064.1 nm. The outside diameter is 1.00 inches. The part number is then:

DQQ – 100 – 0514/1064

Please note that the decimal is not included in the part number.

Polarizer/Retarder Sets

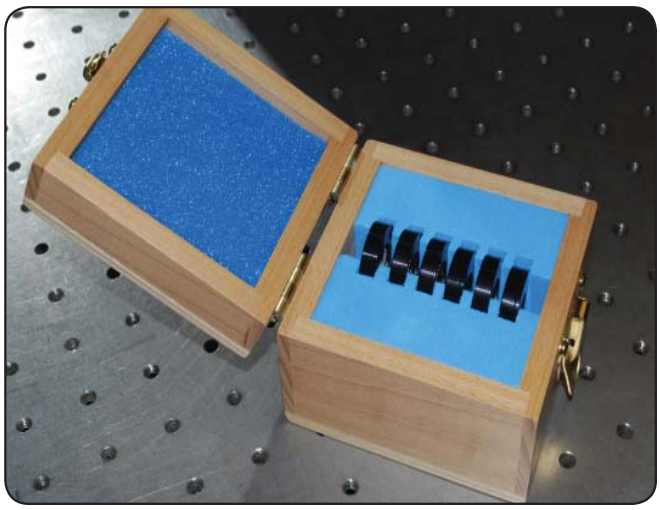

Key Benefits

- **Convenient box set**
- **Precise components**

Meadowlark Optics Polarizer/Retarder sets include either a VIS, NIR1 or NIR2 linear polarizer and several precision retarders as described on pages 30-31 within the same wavelength range as the polarizer. By using different combinations, a variety of different polarization states can be accurately and reproducibly created. For example, a linear polarizer with a quarter-wave retarder at 45 degrees can be used to make circularly polarized light. The parts are 1" diameter, 0.7" clear aperture and are packaged in a protective wooden box. Each component is mounted in a black anodized aluminum ring.

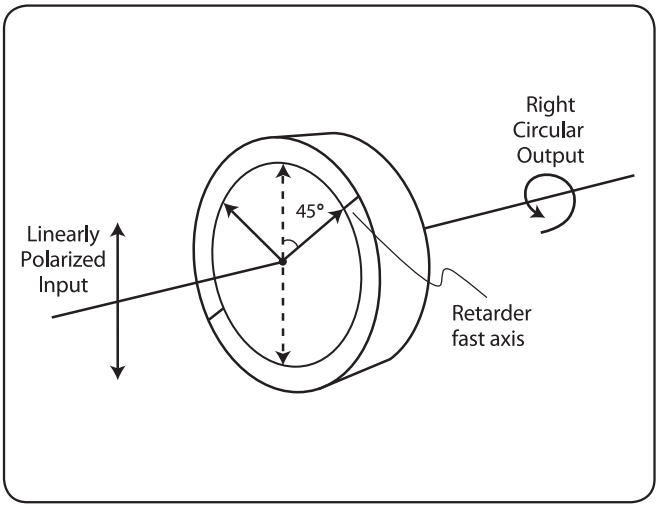

Fig. 2-17 A quarter-wave retarder converts linearly polarized light to circularly polarized light, or vice versa

For polarizer specifications please refer to page 7.
For retarder specifications please refer to page 31.

ORDERING INFORMATION

Item	*Part Number*
PRS1 sets include a polarizer and one retarder.	
VIS Polarizer/Retarder Set	PRS1-VIS-λ
NIR1 Polarizer/Retarder Set	PRS1-NIR1-λ
NIR2 Polarizer/Retarder Set	PRS1-NIR2-λ
PRS3 sets include a polarizer and three retarders.	
VIS Polarizer/Retarder Set	PRS3-VIS-λ_1/ λ_2/ λ_3
NIR1 Polarizer/Retarder Set	PRS3-NIR1-λ_1/ λ_2/ λ_3
NIR2 Polarizer/Retarder Set	PRS3-NIR2-λ_1/ λ_2/ λ_3
PRS5 sets include a polarizer and five retarders.	
VIS Polarizer/Retarder Set	PRS5-VIS-λ_1/ λ_2/ λ_3/ λ_4/ λ_5
NIR1 Polarizer/Retarder Set	PRS5-NIR1-λ_1/ λ_2/ λ_3/ λ_4/ λ_5
NIR2 Polarizer/Retarder Set	PRS5-NIR2-λ_1/ λ_2/ λ_3/ λ_4/ λ_5

Please specify your wavelength(s) λ in nanometers when ordering. Half wave and quarter wave retarders are available over the following regions:

VIS: 400 - 700 nm
NIR1: 650 - 850 nm
NIR2: 800 - 1700 nm

NEW

Beamsplitter Cube Mounts

Fig. 3-2 10 mm mount 3-axis stage (tip, tilt and rotation)

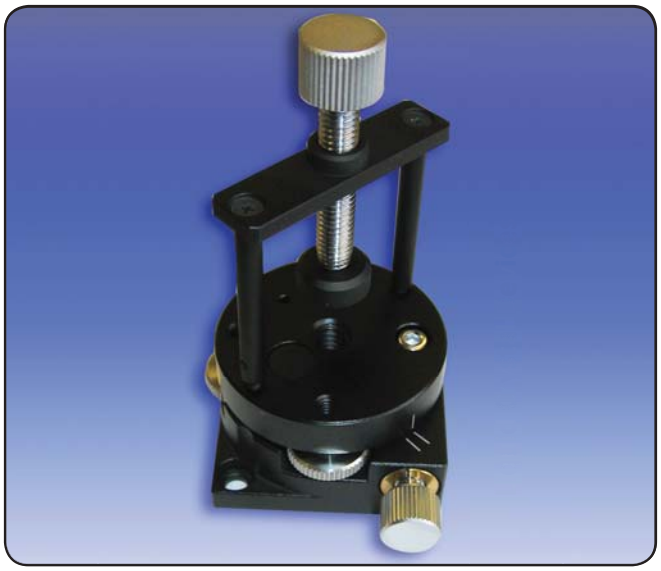

Fig. 3-3 32 mm mount 3-axis stage (tip, tilt and rotation)

Key Benefits

- **Holds standard size optics**
- **Ease of use**

Meadowlark provides beamsplitter mounts which allows precision positioning of beamsplitting polarizers up to 32 mm in size.

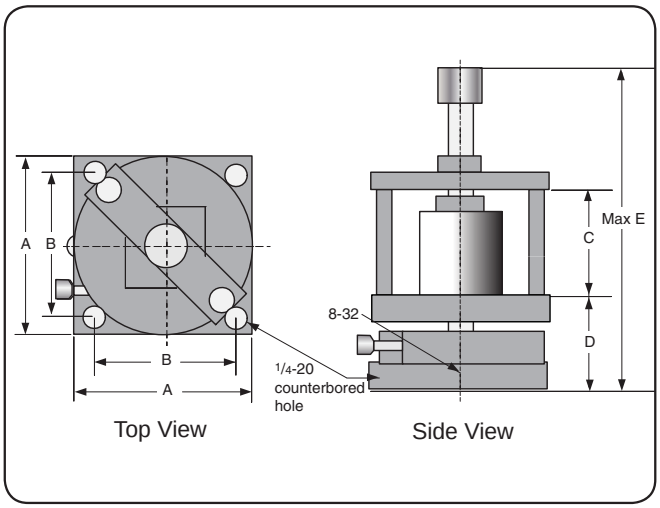

Fig. 3-4 BCM-M40 prism axis

SPECIFICATIONS						
Dimensions (mm)					*Max Prism Size*	*Part Number*
A	B	C	D	E		
65.0	50.8	40.0	35.0	122.0	32 mm	BCM-M32
25.0	20.0	10.0	16.0	36.0	10 mm	BCM-M10

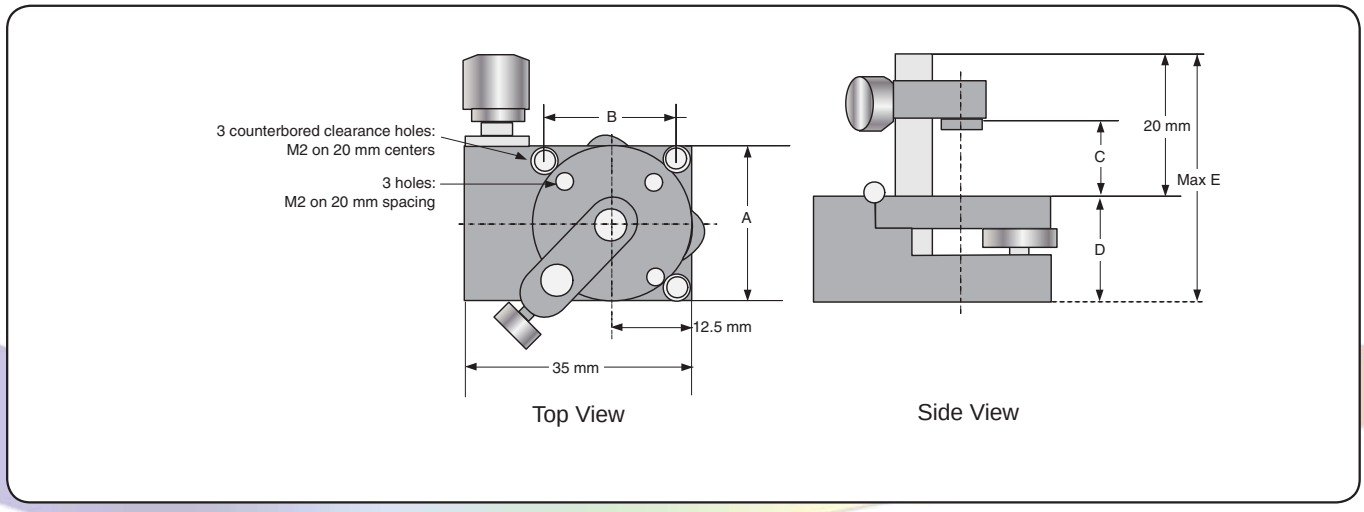

Fig. 3-5 BCM-M25 prism axis

NEW

High Contrast Optical Shutter

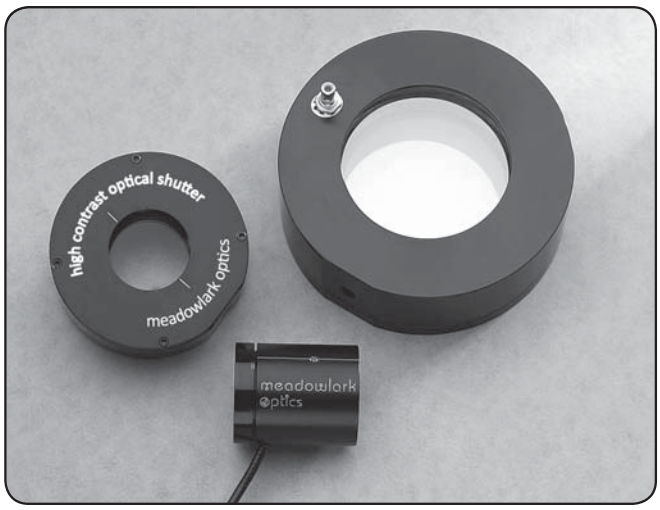

Key Benefits

- **High Contrast**
- **No mechanical motion**
- **Computer control capability**
- **No vibration**

This liquid crystal shutter is a vibration-free alternative to mechanical shutter that is especially convenient for use in polarized light beams. The liquid crystal switches between a state that rotates the input polarization by 90° with no voltage applied and a state that makes no change in the input polarization with 8 to 10 volts applied. The applied voltage is 2 kHz AC as supplied by our 4010, 3040 or 3050 liquid crystal drivers. The liquid crystal configuration is twisted nematic. The shutter is supplied with integral dichroic visible polarizers that function over the wavelength range of 450 nm to 700 to provide an average contrast ratio of better than 1,000:1 over this wavelength range. Shutters with larger aperture sizes and with wavelength coverage to 2.1 microns are available on a custom basis. Please call with your special requirements.

SPECIFICATIONS	
Liquid crystal configuration	Twisted nematic
Substrate Material	Optical quality synthetic fused silica
Polarizer Material	Dichroic Polymer
Wavelength Range	450-700 nm
Contrast Ratio (average)	1,000:1
Angular Field of View	25° incidence angle with some reduction above 10°
Switching Time (10% to 90%) at room temperature	
Closed to open: Open to closed	5 milliseconds 0.4 milliseconds
Transmitted Wavefront Distortion (at 632.8 nm)	≤ λ/2
Surface Quality	60-40 scratch and dig
Reflectance (per surface)	≤ 0.5% at normal incidence
Beam Deviation	≤ 5 arc min
Recommended Safe Operating Limit	1 W/cm², CW
Glass Thickness	0.48 — 0.52 inches
Polarization Direction	Vertical on input face, horizontal on output face
Storage temperature	-20° C to +80° C
Operating temperature	0° C to +50° C

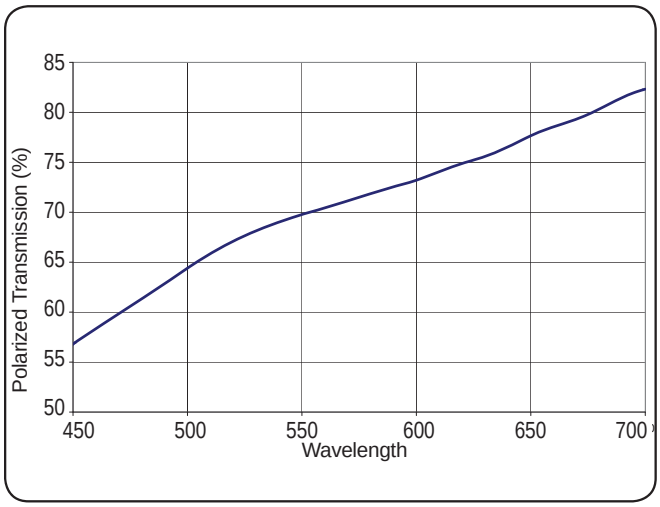

Fig. 4-16 Transmission for Polarized Light

ORDERING INFORMATION			
Diameter, D (in.)	*Clear Aperture, CA (in.)*	*Thickness t (in.)*	*Part Number*
1.00	0.37	1.23	LCS - 100
2.00	0.70	0.75	LCS - 200
3.00	1.60	1.00	LCS - 300

Swift Liquid Crystal Principles

Meadowlark Optics next generation liquid crystal variable devices utilizes a new bulk stabilized polymer liquid crystal formulation. With switching speeds of less than a 150 microseconds in both directions our new "Swift" Liquid Crystal devices are perfect for applications where response time is critical.

Swift Liquid Crystal Technology

Liquid crystal polymer composite materials have been studied extensively is the past decades because of their intriguing physics and their potential application in robust, fast-switching liquid crystal devices. Meadowlark Optics has developed a novel fabrication process in which a polymer network is utilized to enhance the electro-optical performance of our liquid crystal devices.

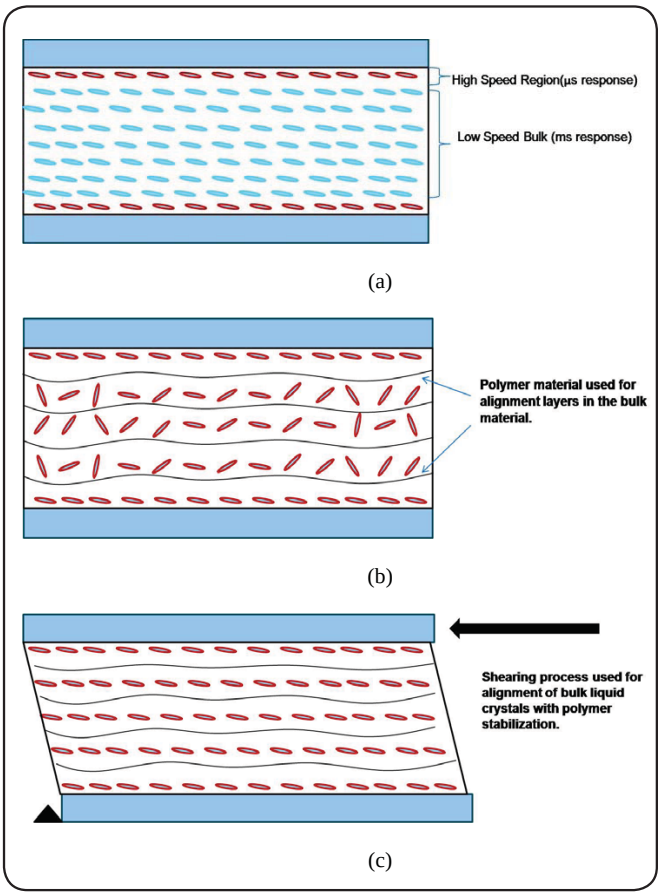

Fig. 4-17 (a) Typical bulk liquid crystal device showing both regions of fast and slow electro-optical response.

(b) A polymer stabilized liquid crystal device showing random alignment in the bulk of the material.

(c) A Swift Liquid Crystal device after alignment process.

Typical bulk liquid crystal devices, such as Meadowlarks' LCVR, have response times that are governed by the bulk of the liquid crystal and are a function of cell gap.

As cell gap increases, switching times increase as the square of the thickness. This effect is due to molecular properties of the bulk liquid crystal material and the alignment layer of the cell (See Figure 4-6). The actual temporal electro-optical response of the cell has two components, (1) a very fast surface layer effect that occurs very close to the alignment layer and is on the order of microseconds and (2) a relatively slow response that occurs in the bulk of the material on the order of milliseconds. This second response dominates in a typical bulk liquid crystal device. Figure 4-17 (a) defines these two regions for a standard liquid crystal variable retarder cell. To overcome this effect the introduction of small amounts of polymer material into the bulk allow for a multitude of alignment surfaces for the liquid crystal material. This allows for alignment surface effects throughout the bulk of the cell (Figure 4-17 (b)). The addition of a polymer stabilizing material in the bulk essentially decouples the cell gap from the switching speed. The challenge to this type of device is now there are no means for uniform liquid crystal alignment in the bulk, such that after infiltration of polymer material; the liquid crystal is aligned in random fashion with no particular "fast-axis" for functional retarder devices. For liquid crystal alignment to occur Meadowlark Optics performs a mechanical shearing process on the devices that aligns the bulk liquid crystal material (Figure 4-17 (c)). Once this step is performed the cell is locked into place and sealed. This assembly process ensures excellent uniformity in alignment of the liquid crystal molecules and gives a retardance uniformity across the clear aperture of less than 20nm.

Meadowlark Optics Swift liquid crystal technologies can be used throughout the visible and near infrared region. While these devices, like all liquid crystal devices, are affected by temperature and wavelength changes, they can be calibrated to accommodate those differences. Each Swift liquid crystal variable retarder is supplied with retardance versus voltage performance data for your specified wavelength, while our shutter devices are provided with temporal performance data. A coaxial cable with mating connector is provided for easy attachment to one of our new high voltage power supply sources.

NEW

Swift Liquid Crystal Variable Retarders

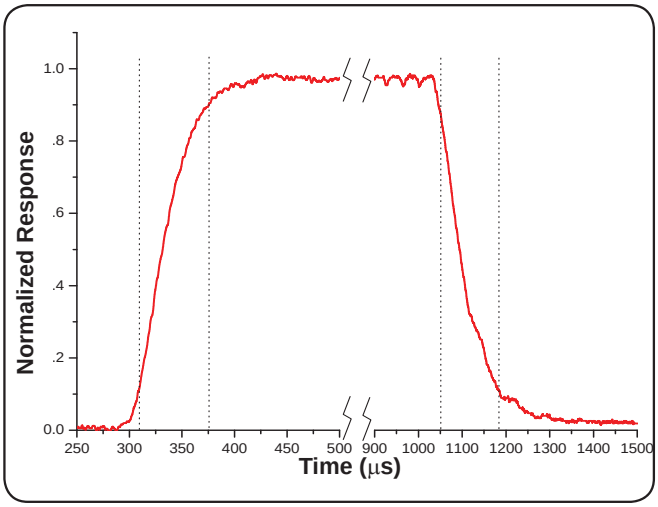

Fig. 4-18 Swift Liquid Crystal Response Time Plot

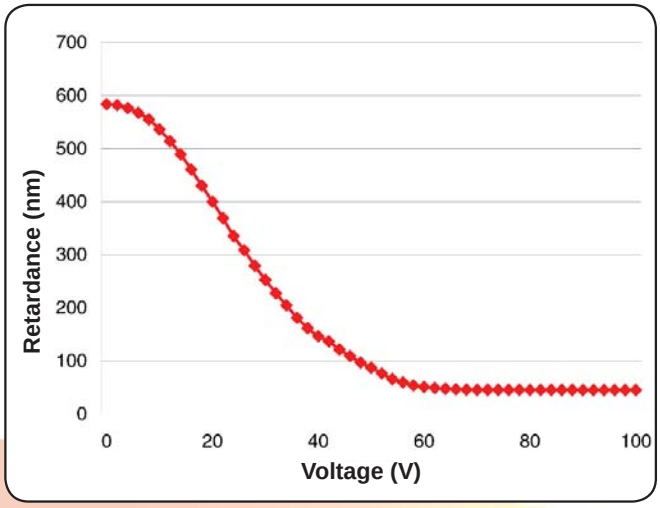

Fig. 4-19 Swift Liquid Crystal Retardance vs Voltage

Key Benefits

- **Sub-millisecond response times**
- **Computer control capability**
- **Temperature control options**
- **Performance from 450 to 1800 nm**

The next generation of liquid crystal variable retarders utilizes a new bulk stabilized polymer liquid crystal formulation. With switching speeds of less than a 150 microseconds in both directions the Swift Liquid Crystal Variable Retarder (SLCVR) is perfect for applications where response time is critical. The SLCVRs require a high voltage (< 100 Vrms) 13 kHz square wave of adjustable amplitude that is provided by our D3060HV High Voltage Interface (see page 62). A temperature sensing and control option can be added to our SLCVRs for accurate controlling of the operating temperature. The thermal sensor is attached directly to the SLCVR substrate, outside the clear aperture. Custom SLCVRs are available for a variety of applications.

SPECIFICATIONS	
Retarder Material	Polymer stabilized nematic liquid crystals
Substrate Material	Optical quality synthetic fused silica
Response Time (10-90%)	≤ 175 µs (zero to half-wave) ≤ 175 µs (half-wave to zero)
Contrast Ratio	150:1, minimum
Retardance Range	
Without compensator With compensator	~50 nm to λ/2 0 to λ/2 custom ranges are available
Transmitted Wavefront Distortion (at 632.8 nm)	≤ λ/2
Surface Quality	40-20 scratch and dig
Beam Deviation:	≤ 2 arc min
Reflectance (per surface):	≤ 0.5% at normal incidence
Diameter Tolerance	± 0.005 in.
Storage Temperature	-20° C to 80° C
Operating Temperature	0° C to 55° C
Wavelength Range	VIS: 450-700 nm IR 1: 650-950 nm IR 2: 900-1250 nm IR 3: 1200-1700 nm

ORDERING INFORMATION

Diameter, D (in.)	*Clear Aperture, CA (in.)*	*Thickness t (in.)*	*Part Number*
Without Attached Compensator (50 nm to λ/2)			
2.00	0.70	0.75	SVR - 200
With Attached Compensator (0 nm to λ/2)			
2.00	0.70	0.75	SRC - 200

Please specify spectral region when placing your order.

NEW

Swift Optical Shutters

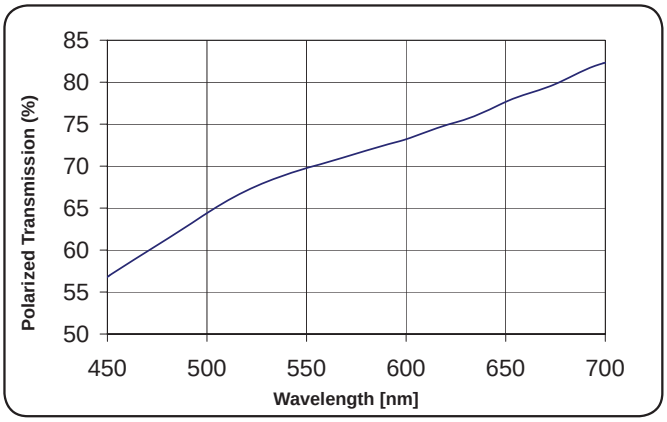

Fig. 4-20 Polarized transmission of the Swift Optical Shutter in the open state

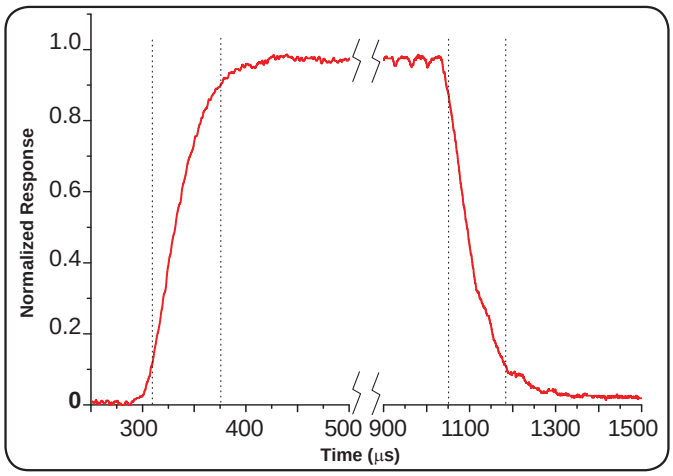

Fig. 4-21 Swift LC Response Time Plot

ORDERING INFORMATION			
Diameter, D (in.)	*Clear Aperture, CA (in.)*	*Thickness t (in.)*	*Part Number*
2.00	0.70	0.75	SCS - 200

Key Benefits

- **No mechanical motion**
- **Computer control capability**
- **Noiseless**
- **High speed**

This liquid crystal shutter is a vibration-free alternative to mechanical shutters for use in high- speed shutter applications. It uses a Swift LC cell between crossed polarizers to provide sub-millisecond switching for both opening and closing. Switching time is 125 microseconds to open and 125 microseconds to close. The switching times are less than 50 microseconds if the shutter is heated to 40° C. The D3060HV controller provides this temperature control capability. These shutters show some haziness in the liquid crystal layer in the blue and green wavelengths. The light loss from this haze is about 1% at 700 nm but increases monotonically to about 10% loss at 450 nm. Scatter at wavelengths above 700 nm is negligible. The shutter is supplied with integral dichroic visible polarizers that function over the wavelength range of 450 nm to 700 nm to provide an average contrast ratio of better than 200:1. Shutters with larger aperture sizes and with wavelength coverage to 2.1 microns are available on a custom basis. Please call with your special requirements.

SPECIFICATIONS	
Retarder Material	Polymer stabilized nematic liquid crystals
Substrate Material	Optical quality synthetic fused silica
Polarizer Material	Dichroic Polymer
Wavelength Range	450-700 nm
Contrast Ratio (average)	200:1
Angular Field of View	± 5 ° incidence angle
Switching Time (10% to 90%) at room temperature	
Closed to open: Open to closed	150 µs 150 µs
Switching Time (10% to 90%) at 40° C	50 µs
Transmitted Wavefront Distortion (at 632.8 nm)	≤ λ/2
Surface Quality	60-40 scratch and dig
Reflectance (per surface):	≤ 0.5% at normal incidence
Beam Deviation	≤ 5 arc min
Recommended Safe Operating Limit	1 W/cm², CW 300 mJ/cm², 10 ns, visible
Glass Thickness	0.48 — 0.52 inches
Polarization Direction	Vertical on input face, horizontal on output face
Storage temperature	-20° C to +70° C
Operating temperature	-10° C to +60° C

NEW

Basic Liquid Crystal Controller

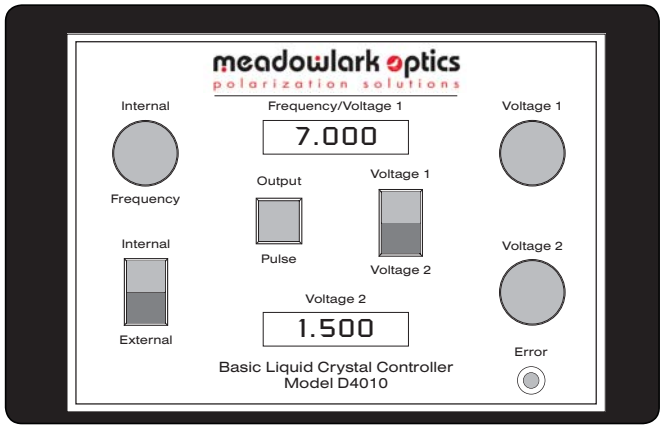

Fig. 5-1 Model D4010 Basic Liquid Controller front panel layout

Meadowlark Optics is excited to announce the release of the Model D4010, our new Basic Liquid Crystal Controller. This liquid crystal (LC) driver is designed to integrate with any single (standard) Meadowlark Optics LC device currently offered as well as any nematic Liquid Crystal device compatible with the specifications listed. Digital LED voltage and frequency readouts provide added convenience. Now, frequency and voltage settings can be easily stored by simply pressing the adjustment knob. Also, system memory retains voltage and frequency settings at power down.

With a Liquid Crystal Variable Retarder, manual adjustment of the voltage amplitude controls the device retardance. Figure 4-8 on page 49 illustrates the relationship between voltage and retardance.

Independent voltage settings allow easy and repeatable selection of two retardance values. Often, it is desirable to modulate between the two states. For example, switching between quarter-wave and half-wave retardance changes linearly polarized light to either left or right circular. A manual toggle allows easy switching between two states.

Key Benefits:

- **Convenient, stand-alone bench top operation**
- **Versatile - compatible with all standard Meadowlark Optics LC devices and other nematic liquid crystal devices with compatible listed specifications**
- **System memory retains voltage and frequency settings at power down**
- **Bright green, digital LED voltage and frequency readouts**
- **SMA and BNC outputs, with no adapters required**
- **Voltage and frequency save and restore function**
- **Out-of-the-box functionality. Sets up in minutes.**
- **Safe, low voltage operation. Fuse protected.**
- **Intuitive operation. Compact. Easy to use.**
- **ROHS and CE compliant**
- **Low DC bias protects liquid crystal**

Model D4010 comes equipped with its own internal modulation control. The Internal Frequency knob adjusts periodic switching between the two voltage settings. An external input allows modulation to run synchronously with other equipment.

Each Meadowlark Optics Liquid Crystal Variable Retarder is supplied with a plot of its actual retardance versus voltage. Using your Model D4010 Controller and this retardance plot ensures accurate retardance to voltage correlation.

SPECIFICATIONS	
Output Voltage	0 to 20 V rms, maximum
Voltage Resolution	± 1 mV for < 10 V output ± 10 mV for ≥ 10 V output
Fundamental Drive Waveform	2 kHz ac square wave
External Modulation (input)	TTL compatible 5 V maximum
Output Bias	± 5 mV dc, maximum
Power Requirements	100 – 240 V ac 47 – 63 Hz 500 mA
Internal Frequency (modulation)	0.5 – 150 Hz 50% duty cycle
External Frequency (modulation)	DC – 500 Hz, variable duty cycle allowable
External Dimensions (W x D x H)	7.0 x 5.0 x 3.0 in.
CE Compliance	Compliant

ORDERING INFORMATION	
Basic LC Controller	D4010

Two year and three year extended warranty options available, please contact your Meadowlark Optics sales engineer

NEW

Two Channel High Voltage Interface

The Two Channel High Voltage Digital Interface is designed for high precision computer control of up to two Meadowlark Optics Swift LC liquid crystal devices at one time.

The D3060HV Package includes all the functionality of the D3050 plus the high voltage circuitry necessary for Swift LC devices. CellDRIVE 3100 HV software includes all the features of the CellDRIVE 3100 Advanced software, but is optimized for the high-speed Swift LC devices. Also included is capability for temperature monitoring and control on one channel. The Advanced Package allows the amplitude of the 13 kHz square wave output to be driven either by an external signal supplied to a front panel connector or specific CellDRIVE generated waveforms including sinusoidal, square, triangle, sawtooth and transient nematic effect waveforms. Additional functions include the capability to output a sync pulse on a front panel connector at desired points in the CellDRIVE generated waveforms and the ability to save/restore all CellDRIVE settings to/from a file.

Package includes:

- **D3060HV Controller Unit with external input and sync output front panel connectors**
- **User Manual**
- **USB and RS232 cables**
- **Temperature control cable**
- **LC-Controller interface cable**
- **Power supply and power cable**
- **Temperature monitoring and control**
- **CellDRIVE 3100 HV Software**
- **National Instruments LabVIEW virtual instruments driver**

ORDERING INFORMATION	
High Voltage Controller	D3060HV
High Voltage Cable	Swift LC Cable

Key Benefits:

- **USB or RS232 interface**
- **C++ code examples (all required libraries included)**
- **Compact and simple to use**
- **Microsoft® HyperTerminal configuration file included**
- **Independent control of voltage levels on two channels to 10 mV resolution**
- **Includes National Instruments LabVIEW™ Virtual Instrument drivers to interface with custom software**

SPECIFICATIONS	
Fundamental Drive Waveform	13 kHz ac square wave
Modulation Amplitude	0-100 V rms
Modulation Resolution	10 mV (1.55 mV using LabVIEW™ subroutines)
DC Offset	< 50 mV
Communications Interface	USB or RS232
LC cell to Controller Connections	LEMO™ RF cable, 2 m length
Power Requirements	100 – 240 Vac 47 – 63 Hz 2.5 A
Safety Feature	Keyed Interlock Switch
Dimensions (L x W x H)	10.50 x 7.25 x 4.0 in.
Weight	6 lbs.
Modulation Waveforms	external modulation input (0-5 V) Sinusoidal Triangle Square Sawtooth transient nematic effect
Temperature Control (one channel only)	Active heating/passive cooling to within ± 1° C of nominal set point
Sync Output	TTL, 1 µs pulse, user specified phase

Minimum System Requirements

- PC with Pentium II class processor
- 32 MB RAM
- CD ROM drive
- 20 MB hard drive space
- USB or RS232 COM Port
- Windows™ 98/ME/2000/XP/Vista
- Use of LabVIEW Instrument Library requires LabVIEW version 6.1 or higher